CS 410/510 - Software Engineering

Agile Software Development

Reference: Sommerville, Software Engineering, 10 ed., Chapter 3

The big picture

Rapid development and delivery is now often the most important requirement for software systems. Businesses operate in a fast-changing requirement and it is practically impossible to produce a set of stable software requirements. Software has to evolve quickly to reflect changing business needs.

Agile development methods emerged in the late 1990s whose aim was to radically reduce the delivery time for working software systems:

- Program specification, design, and implementation are **interleaved**
- The system is developed as a series of frequent versions or **increments**
- **Stakeholders** involved in version specification and evaluation
- Extensive **tool support** (e.g. automated testing tools) used to support development
- **Minimal documentation** - focus on working code

Plan-based vs agile development

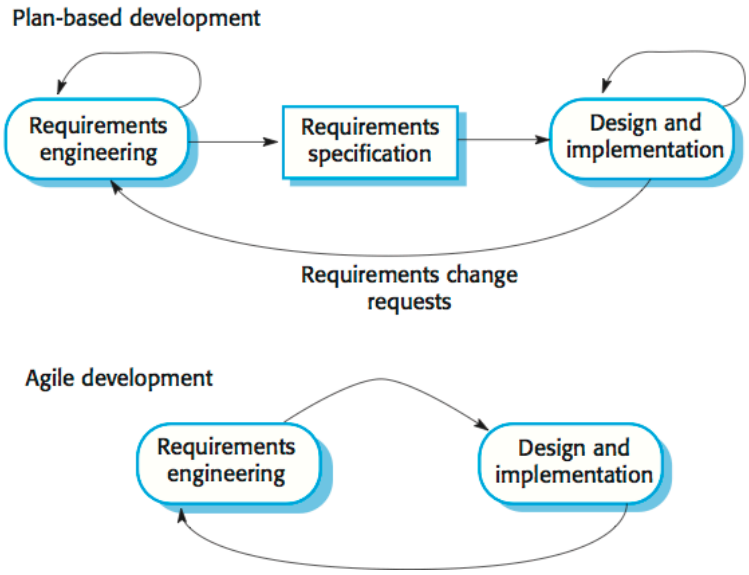

Plan-driven development

A plan-driven approach to software engineering is based around separate development stages with the outputs to be produced at each of these stages planned in advance. Not necessarily waterfall model: plan-driven, incremental development is possible. Iteration occurs within activities.

Agile development

Specification, design, implementation and testing are inter-leaved and the outputs from the development process are decided through a process of negotiation during the software development process.

Most projects include elements of plan-driven and agile processes. Deciding on the balance depends on many technical, human, and organizational issues.

Agile methods

Dissatisfaction with the overheads involved in software design methods of the 1980s and 1990s led to the creation of agile methods. These methods:

- **Focus on the code** rather than the design.
- Are based on an **iterative approach** to software development.
- Are intended to deliver working software quickly and evolve this quickly to **meet changing requirements**.

The aim of agile methods is to reduce overheads in the software process (e.g. by limiting documentation) and to be able to respond quickly to changing requirements without excessive rework.

Manifesto for Agile Software Development:

We are uncovering better ways of developing software by doing it and helping others do it. Through this work we have come to value:

- *Individuals and interactions over processes and tools*
- *Working software over comprehensive documentation*
- *Customer collaboration over contract negotiation*
- *Responding to change over following a plan*

That is, while there is value in the items on the right, we value the items on the left more.

The **principles** of agile methods:

Customer involvement
: Customers should be closely involved throughout the development process. Their role is provide and prioritize new system requirements and to evaluate the iterations of the system.

Incremental delivery
: The software is developed in increments with the customer specifying the requirements to be included in each increment.

People not process
: The skills of the development team should be recognized and exploited. Team members should be left to develop their own ways of working without prescriptive processes.

Embrace change
: Expect the system requirements to change and so design the system to accommodate these changes.

Maintain simplicity
: Focus on simplicity in both the software being developed and in the development process. Wherever possible, actively work to eliminate complexity from the system.

Agile method **applicability**:

- Product development where a software company is developing a **small or medium-sized product**.
- Custom system development within an organization, where there is a clear **commitment from the customer** to become involved in the development process and where there are not a lot of external rules and regulations that affect the software.
- Because of their focus on small, tightly-integrated teams, there are **problems in scaling** agile methods to large systems.

Problems with agile methods:

- It can be difficult to keep the interest of **customers** who are involved in the process.
- **Team members** may be unsuited to the intense involvement that characterizes agile methods.
- Prioritizing changes can be difficult where there are **multiple stakeholders**.
- **Maintaining simplicity** requires extra work.
- **Contracts** may be a problem as with other approaches to iterative development.

Extreme programming

Perhaps the best-known and a very influential agile method, Extreme Programming (XP) takes an 'extreme' approach to iterative development:

- New versions may be built several times per day;
- Increments are delivered to customers every 2 weeks;
- All tests must be run for every build and the build is only accepted if tests run successfully.

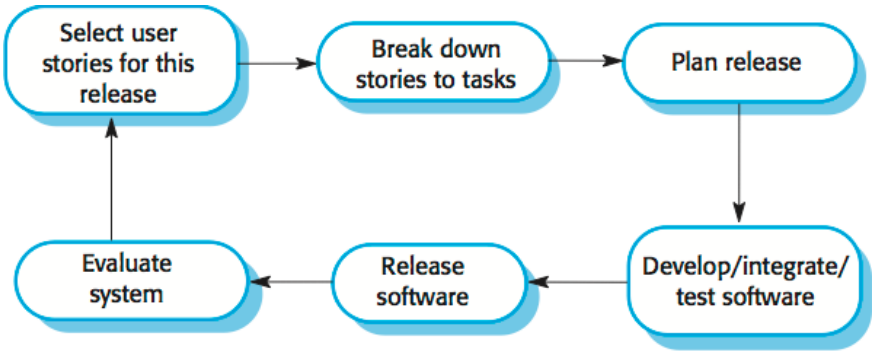

This is how XP supports **agile principles**:

- Incremental development is supported through **small, frequent system releases**.
- Customer involvement means **full-time customer engagement** with the team.
- People not process through **pair programming**, **collective ownership**, and a process that avoids long working hours.
- Change supported through **regular system releases**.
- Maintaining simplicity through **constant refactoring** of code.

Influential XP practices

Extreme programming has a technical focus and is not easy to integrate with management practice in most organizations. Consequently, while agile development uses practices from XP, the method as originally defined is not widely used.

Key practices of XP include:

User stories for specification

In XP, a customer or user is part of the XP team and is responsible for making decisions on requirements. User requirements are expressed as user stories or scenarios. These are written on cards and the development team break them down into implementation tasks. These tasks are the basis of schedule and cost estimates. The customer chooses the stories for inclusion in the next release based on their priorities and the schedule estimates.

Refactoring

Conventional wisdom in software engineering is to design for change. It is worth spending time and effort anticipating changes as this reduces costs later in the life cycle. XP, however, maintains that this is not worthwhile as changes cannot be reliably anticipated. Rather, it proposes constant code improvement (refactoring) to make changes easier when they have to be implemented. Programming teams look for possible software improvements and make these improvements even where there is no immediate need for them. This improves the understandability of the software and so reduces the need for documentation. Changes are easier to make because the code is well-structured and clear. However, some changes require architecture refactoring and this is much more expensive.

Test-first development

Testing is central to XP and XP has developed an approach where the program is tested after every change has been made.

Test-driven development: writing tests before code clarifies the requirements to be implemented. Tests are written as programs rather than data so that they can be executed automatically. The test includes a check that it has executed correctly (usually relies on a testing framework such as Junit). All previous and new tests are run automatically when new functionality is added, thus checking that the new functionality has not introduced errors.

Customer involvement: The role of the customer in the testing process is to help develop acceptance tests for the stories that are to be implemented in the next release of the system. The customer who is part of the team writes tests as development proceeds. All new code is therefore validated to ensure that it is what the customer needs. However, people adopting the customer role have limited time available and so cannot work full-time with the development team. They may feel that providing the requirements was enough of a contribution and so may be reluctant to get involved in the testing process.

Pair programming

Pair programming involves programmers working in pairs, developing code together. This helps develop common ownership of code and spreads knowledge across the team. It serves as an informal review process as each line of code is looked at by more than one person. It encourages refactoring

as the whole team can benefit from improving the system code. In pair programming, programmers sit together at the same computer to develop the software. Pairs are created dynamically so that all team members work with each other during the development process. The sharing of knowledge that happens during pair programming is very important as it reduces the overall risks to a project when team members leave. Pair programming is not necessarily inefficient and there is some evidence that suggests that a pair working together is more efficient than two programmers working separately.

Scrum

The Scrum approach is a general agile method but its focus is on managing iterative development rather than specific agile practices. There are three phases in Scrum:

1. The initial phase is an outline planning phase where you establish the general objectives for the project and design the software architecture.
2. This is followed by a series of **sprint** cycles, where each cycle develops an increment of the system.
3. The project closure phase wraps up the project, completes required documentation such as system help frames and user manuals and assesses the lessons learned from the project.

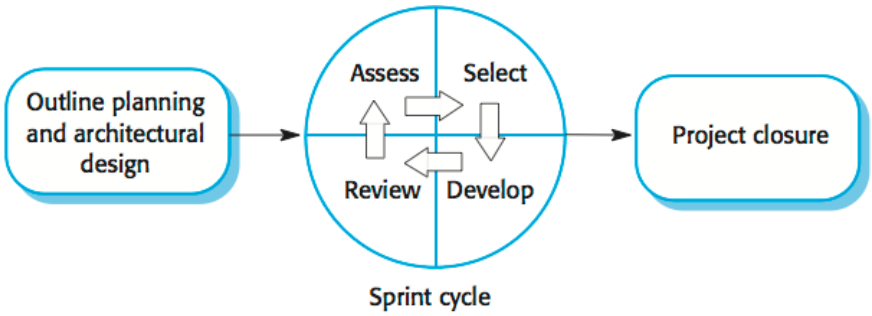

Sprints are fixed length, normally 2-4 weeks. They correspond to the development of a release of the system in XP. The starting point for planning is the **product backlog**, which is the list of work to be done on the project. The selection phase involves all of the project team who work with the customer (**product owner**) to select the features and functionality to be developed during the sprint. Once these are agreed, the team organize themselves to develop the software. During this stage the team is relatively isolated from the product owner and the organization, with all communications channelled through the **ScrumMaster**. The role of the ScrumMaster is to protect the development team from external distractions. At the end of the sprint the work done is reviewed and presented to stakeholders (including the product owner). **Velocity** is calculated during the **sprint review**; it provides an estimate of how much product backlog the team can cover in a single sprint. Understanding the team's velocity helps them estimate what can be covered in a sprint and provides a basis for measuring and improving performance. The next sprint cycle then begins.

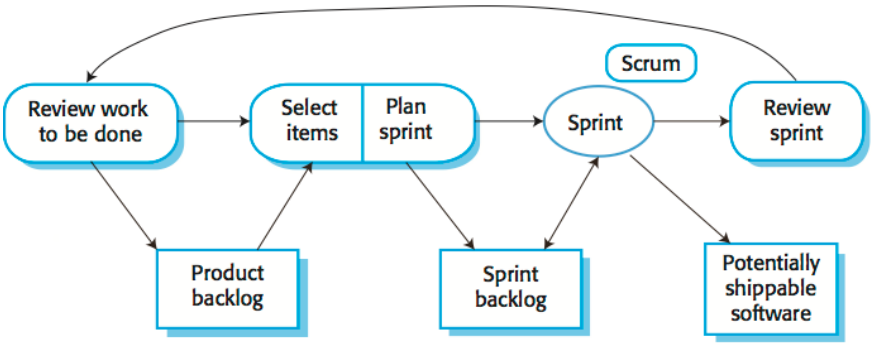

The ScrumMaster is a facilitator who arranges short daily meetings (**daily scrums**), tracks the backlog of work to be done, records decisions, measures progress against the backlog and communicates with the product owner and management outside of the team. The whole team attends daily scrums where all team members share information, describe their progress since the last meeting, problems that have arisen and what is planned for the following day.

Advantages of scrum include:

- The product is broken down into a set of **manageable and understandable chunks**.
- Unstable requirements do not hold up **progress**.
- The whole team have visibility of everything and consequently **team communication** is improved.
- Customers see **on-time delivery** of increments and gain feedback on how the product works.

- **Trust** between customers and developers is established and a positive culture is created in which everyone expects the project to succeed.

Scaling agile methods

Agile methods have proved to be **successful for small and medium sized projects** that can be developed by a small co-located team. It is sometimes argued that the success of these methods comes because of improved communications which is possible when everyone is working together. Scaling up agile methods involves changing these to cope with larger, longer projects where there are multiple development teams, perhaps working in different locations.

Two perspectives on scaling of agile methods:

'Scaling up'
: Using agile methods for developing large software systems that cannot be developed by a small team. For large systems development, it is not possible to focus only on the code of the system; you need to do more up-front design and system documentation. Cross-team communication mechanisms have to be designed and used, which should involve regular phone and video conferences between team members and frequent, short electronic meetings where teams update each other on progress. Continuous integration, where the whole system is built every time any developer checks in a change, is practically impossible; however, it is essential to maintain frequent system builds and regular releases of the system.

'Scaling out'
: How agile methods can be introduced across a large organization with many years of software development experience. Project managers who do not have experience of agile methods may be reluctant to accept the risk of a new approach. Large organizations often have quality procedures and standards that all projects are expected to follow and, because of their bureaucratic nature, these are likely to be incompatible with agile methods. Agile methods seem to work best when team members have a relatively high skill level. However, within large organizations, there are likely to be a wide range of skills and abilities. There may be cultural resistance to agile methods, especially in those organizations that have a long history of using conventional systems engineering processes.